SCHIENLE
MAGNETTECHNIK

# Operating instructions
# Explosionproof and dust-ignitionproof solenoid

Type : xx EX21 047x yzyz

| | |
|---|---|
| Design certificate acc. NEC500 And CEC Anex J: | Class I, Division 1, Groups B,C,D T4 |
| Design certificate acc. NEC502 And CEC Section 18: | Class II/III, Division 1, Groups E,F,G T4 |

Name of certification authority: FM Approvals, 743 Reynolds Rd. West Glocester, RI 02814 USA

Document : B 34 / 2015
Date as of : 27.08.2015

**Manufacturer:**

**Schienle Magnettechnik und Elektronik GmbH**
In Oberwiesen 3
D-88682 Salem-Neufrach

☎ **+49 (0)7553-8268 60**
FAX **+49 (0)7553-8268 61**
**www.schienle.de**

## Summary


| | | Page |
|---|---|---|
| 1 | Introduction | 3 |
| 2 | Usage | 3 |
| 3 | Versions | 4 |
| 3.1 | Type coding | 4 |
| 3.2 | Label | 4 |
| 4 | Technical data | 5 |
| 4.1 | General parameters | 5 |
| 4.2 | Electrical data | 5 |
| 4.2.1 | Generally | 5 |
| 5.0 | Installation and implementing | 6 |
| 5.1 | Generally | 6 |
| 5.2 | Mounting, Demounting | 6 |
| 5.3 | Compound of solenoid and valve | 7 |
| 6 | Maintenance, service, troubleshooting | 7 |
| 7 | Norms and regulations | 7 |
| 8 | Specific Condition of Use – read carefully! | 7 |
| 9 | Dimensioned drawing | 8 |

# 1 Introductions

The solenoid is designed, manufactured and tested in compliance with the standards and regulations generally applicable within of the FM approval. On leaving the factory the solenoids safety-related conditions were proven to be faultless. In order to maintain this status and to ensure safe operation, the operator has to read and observe the notes and warnings contained within this operating instruction.
The solenoid may only be installed and wire-connected by a qualified technician who is familiar with works according to the generally accepted engineering standards, the latest legal regulations and standards of explosion protection.

# 2 Usage

The solenoid is an electro-magneto-mechanical device and is provided for use on hydraulic valves in hazardous locations. The activated coil generates a magnetic field, which executes a force on the solenoid´s movable part. This force changes the pressure or the flow rate of the hydraulic oil and causes a hydraulic actuation which initiates further actuations. The device is manufactured for use as a proportional solenoid, but can also be used as a ON/OFF device.
The interior of the solenoid is filled with hydraulic oil and is exposed to a maximal hydraulic pressure (MWPR) of 210 bar.

Dimensions may be founded on page 8, figure 4.

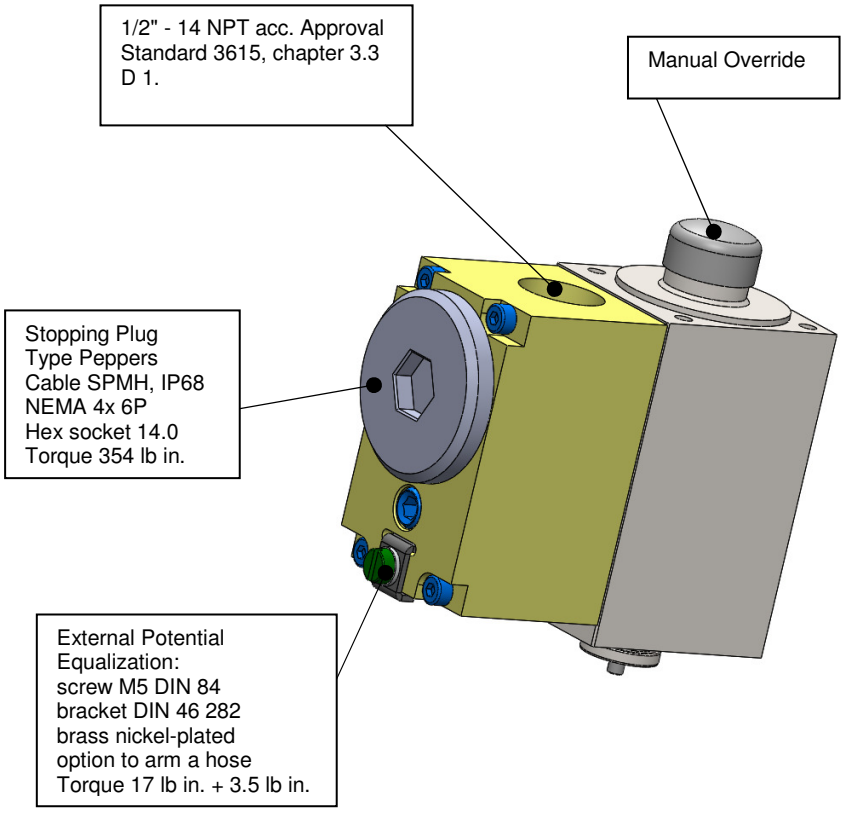


**Figure 1 — Explosion proof and dust-ignitionproof solenoid**

# 3 Versions

## 3.1 Type coding

The solenoid is manufactured with different supply voltage. The mechanical structure remains the same.

**Table 1 Type coding**

| Type coding |
|---|
| xx EX21 047x yzyz |

- zyz: Voltage version e.g. 120 means 120V
- y: Not used yet, Standard A
- x: Versions A, B (A for DC, B for AC Voltage)
- xx: Internal use

**Table 2 Voltage versions and current consumption**

| Version | Voltage ±10% | Resistance ±5% | Limiting current | Nominal current | Suppressor |
|---|---|---|---|---|---|
| | $U_N$ | $R_{20}$ | $I_G$ | $I_N$ | |
| | [V] | [Ω] | [A] | [A] | |
| xx EX21 047A A012 | 12 VDC | 7,4 | 1,06 | 1,62 | 2 voltage suppressor diode (36V) |
| xx EX21 047A A024 | 24 VDC | 28,5 | 0,55 | 0,84 | 2 voltage suppressor diode (36V) |
| xx EX21 047B A120 | 120 VAC | 572 | 0,128 | 0,2 | Bridge Rectifier (1000V) |

## 3.2 Label

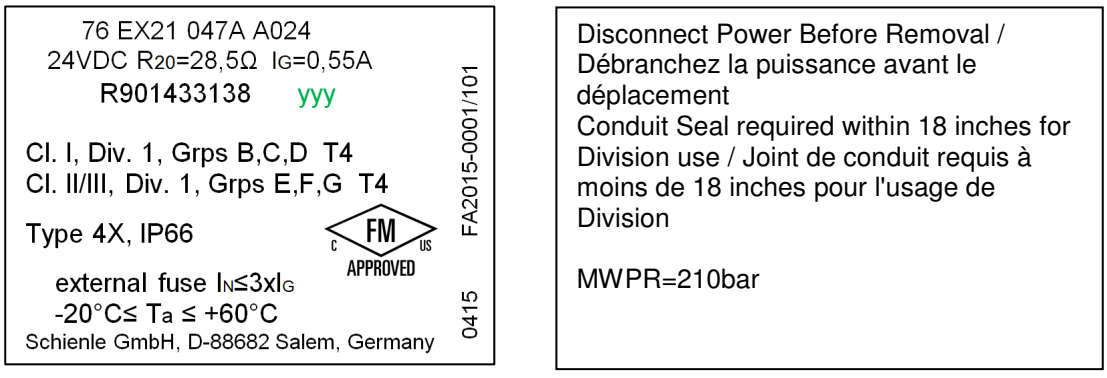


**Figure 2 — Marking plate and Warning Statement are permanently engraved on the solenoid housing**

# 4 Technical data

## 4.1 General parameters

- Protection type NEMA: Type 4X
- Protection type acc. IEC 60529: IP66
- Operating pressure: max. 210 bar
- Coil and coil area are moulded water-proof and indecomposable. Insulation class according to DIN VDE 0580 „F“ (155C°)
- Max. temperature of medium (normally hydraulic oil): 70°C
- Ambient temperature: -20°C up +60°C

## 4.2 Electrical data

### 4.2.1 Generally

The electrical data vary depending on the version of the solenoid, see point 3, table 2.

- Nominal voltage: Table 2, Page 4
- Resistance at 20°C: Table 2, Page 4
- Power-on-time: S1 (100%), mounted on hydraulic valve
- Cold power: $P_{20}$ = 20 [W]
- Electrical connection: max. 1,5 mm² (maximum cross section), AWG 14
  min. 0,75 mm² (minimum cross section), AWG 19
- Protection circuit: Voltage suppressor diode/Bridge rectifier for VAC
- The user has to safeguard each solenoid against short-circuit or overload with a fuse according to IEC 60127-2/V (max. 3x$I_N$)

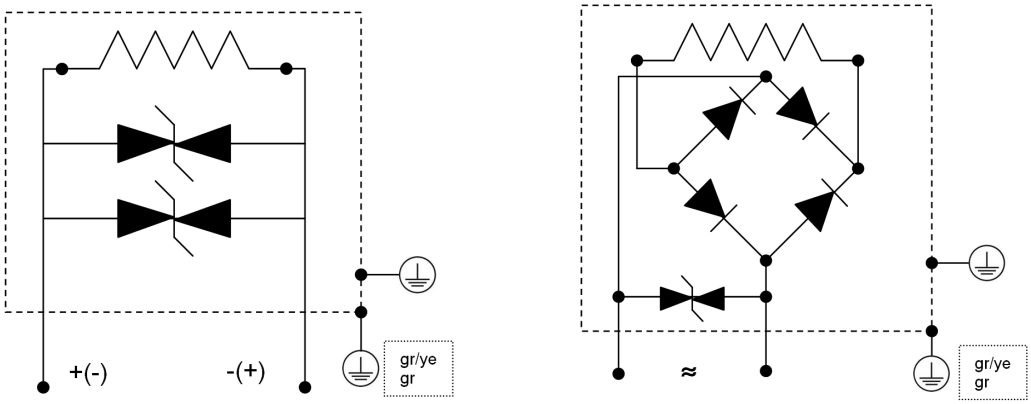


**Figure 3 — Connection diagram, versions A (for DC voltages), B (for AC voltages)**

The DC version of the solenoid may be connected independent of polarity.

# 5 Installation and implementing

## 5.1 Generally

The solenoid may only be operated when assembled to a valve body. If many valve bodies are connected to a valve composite, the operator shall take care of a minimum distance between single valves to avoid an overstepping of the temperature class T4.

The device must only be mounted on an adequately sized hydraulic valve. Minimum volume is given according chapter 5.3. The maximum ambient temperature range of -20°C to 60°C and the maximum temperature of the medium (as a rule hydraulic oil) of 70°C may not be overstepped.

The protection class is performed on the label of the solenoid.

It is the user duty to ensure free and unhindered heat emission during the operation. That means that the solenoid shall neither be covered nor stored adjacent to heat sources during the operation. Care is to be given that the solenoid is not subjected to direct sunlight during operation.

Additionally, the solenoid may be connected to ground via the purpose-built ground clamp at the connector casing.

Conduit Seal required within 18 inches for use in Division area.

## 5.2 Mounting, Demounting

**Allways Disconnect Power Before Mounting or Demounting the Solenoid!**

The solenoid consists of several individual components. These components are fine-tuned to one another and shall not be replaced or demounted individually.

To connect the electrical wire to the solenoid, open carefully the stopping plug by using an appropriate tool (hex socket 14.0). Connect the electrical wire to the terminal and close the solenoid terminal area by assembling the stopping plug. Only 105°C (or higher) rated cable/wire may be used.

Fasteners Tightening Torques:

| | | | |
|---|---|---|---|
| - | Stopping plug | → 354 lb in. | (40Nm) |
| - | Terminal | → 3.54lb in. +0.88 lb in. | (0,4Nm +0,1Nm) |
| - | External Potential Equalization | → 17 lb in. + 3.5 lb in. | (2Nm +0,4Nm) |

When demounting the solenoid, please let the device take over the ambient temperature - otherwise the hot solenoid surface may cause skin injury.

## 5.3 Compound of solenoid and valve

To ensure adequate cooling, the solenoid shall only be operated in conjuction with a valve block. When many valve bodies are connected to a valve composite, make sure that the required minimum size of the single valve and the allowed design of the valve composite are warranted.

All solenoids on a valve composite can be operated simultaneously according to the terms of the operating instructions.

The minimum volume of a valve body is 125 $cm^3$. Valves of bigger dimensions can be used.

# 6 Maintenance, service, troubleshooting

The solenoid is largely maintenance-free.
The solenoid´s surface is to be checked to dust deposits and is to be cleansed at regular intervals.
The user shall not try to repair the device. When failure or damage occurs (also significant corrosion), the device has to be replaced.

# 7 Norms and regulations

FM3600, FM 3615, FM3616, FM3810

CSA-C22.2 No.0.4, 0,5, 25, 30

# 8 Specific Conditions of Use – <u>read carefully !</u>

- No sedimentations on the solenoid surface shall affect the heat emission.
- In order not to affect the label readability and the heat emission of the device, the solenoid should not be varnished.
- Before executing any operation, the solenoid must be disconnected from the power supply.
- Any modifications, which could affect the explosion-safety, are forbidden!
- To keep the temperature class, the solenoid may only be operated in combination with a valve block in accordance with a the operating instructions. The maximum process media temperature of 70 °C shall not be exceeded. See chapter 5.
- The solenoid may only be demounted in a non-explosive-area.
- The solenoid may only be operated by closed stoping plug (354 lb in./40Nm).
- It is allowed to use two solenoids on one valve. A simultaneous energizing of both solenoids induces a dysfunction or a possible overheating and is therefore forbidden. Allways run only one solenoid – otherwise the explosion protection is not given any more.
- A repair is not possible.
- Only 105°C (or higher) rated cable/wire, min. AWG 19 (0,75 $mm^2$) may be used.

**<u>Any warranty claims are denied in case the regulations in this operating manual are not observed !</u>**

# 9 Dimensioned drawing

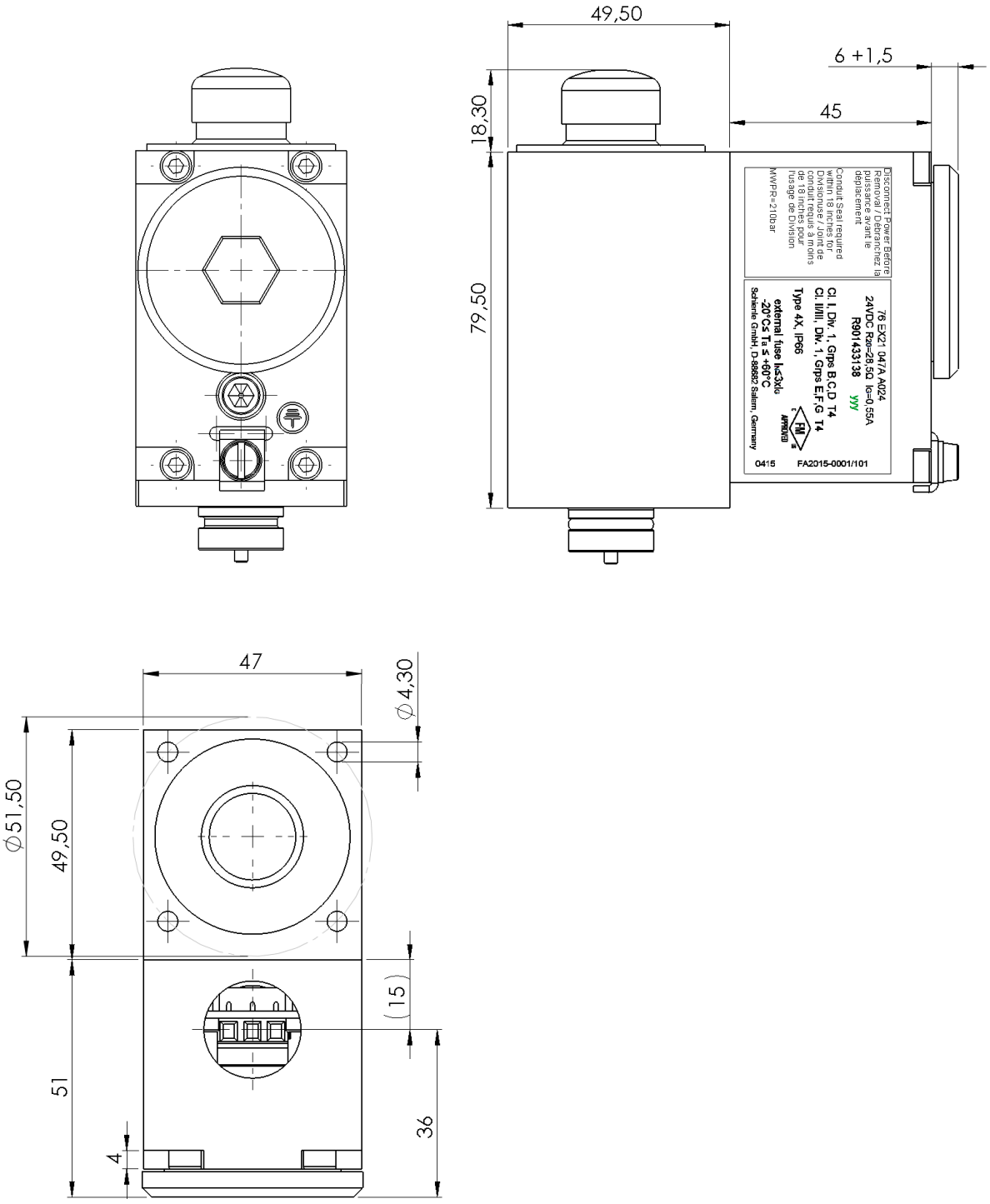


**Figure 4 — Dimensioned drawing**